© – TE Connectivity. All Rights Reserved.

REVISIONS					
P	LTR	DESCRIPTION	DATE	DWN	APVD
	R	REVISED PER ECO-21-006945	27OCT2021	RK	MZ

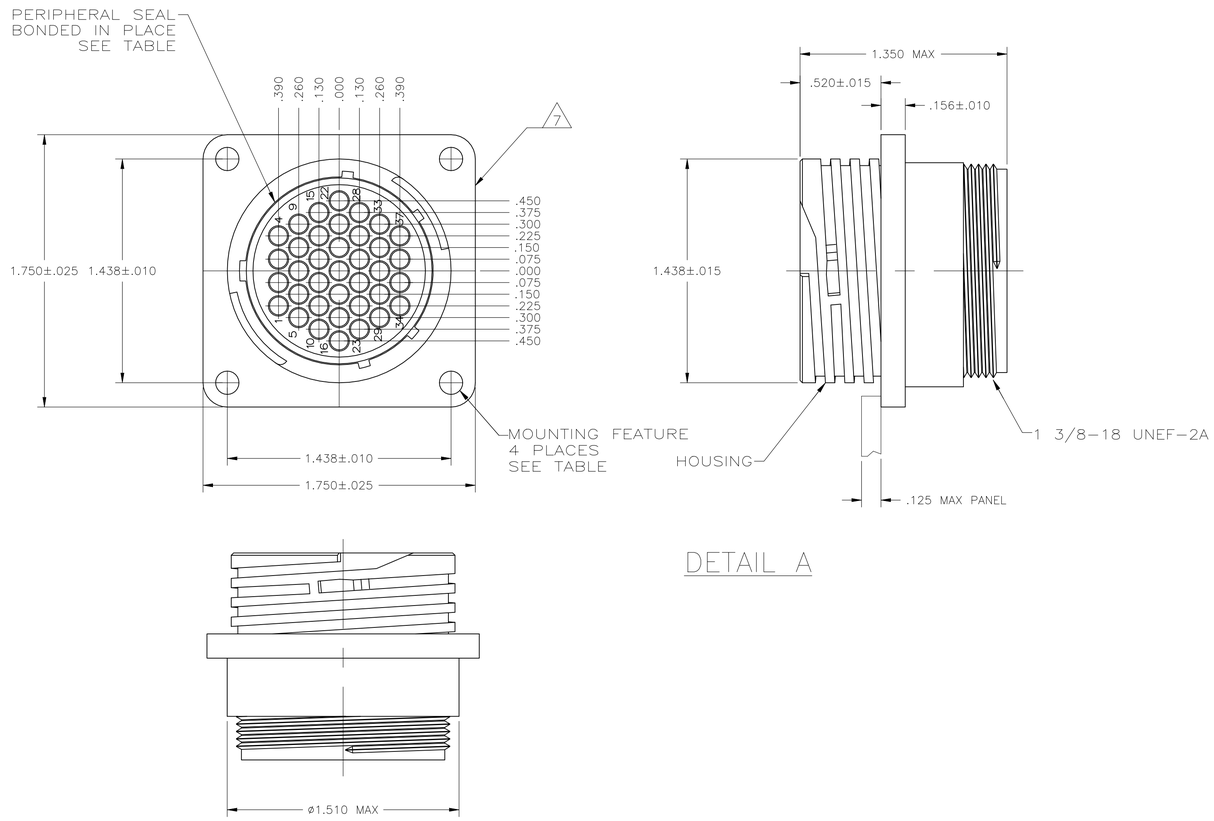

DETAIL A

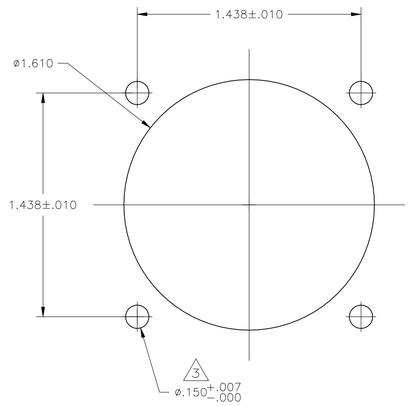

RECOMMENDED PANEL CUTOUT

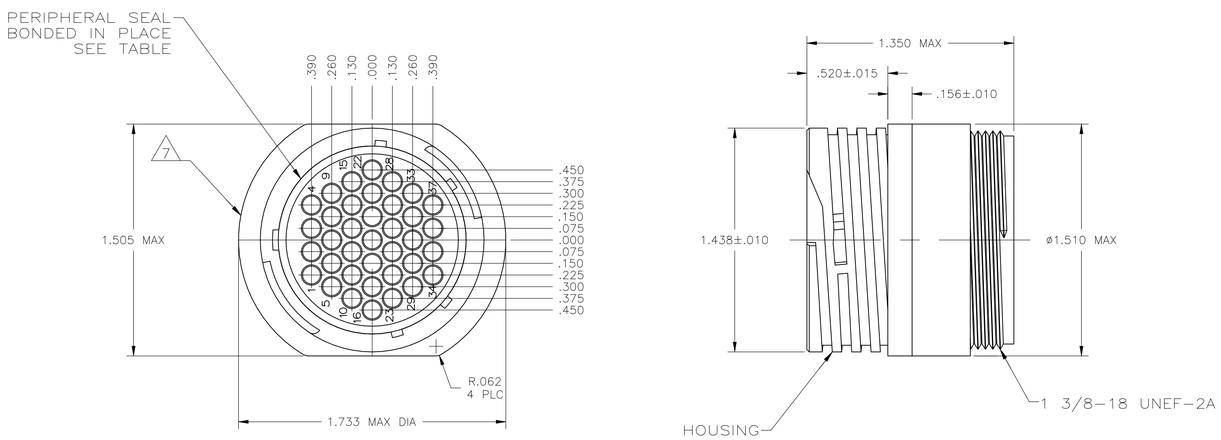

DETAIL B

1 CAVITY IDENTIFICATION ON FRONT AND REAR FACE.

2 WILL ACCEPT THIRTY-SEVEN (37) MULTIMATE PIN CONTACTS.

3 NO 4 FASTENER RECOMMENDED FOR MOUNTING.

4 WHITE DOT NEAR POSTION 1 ON WIRE ENTRY FACE.

5 OBSOLETE PARTS: OBSOLETE CIS STREAMLINING PER D.RENAUD/D.SINISI

6 MATERIALS:
HOUSINGS: PA66, BLACK
PERIPHERAL SEAL: NITRILE BUTADIENE RUBBER
THREADED INSERT: BRASS

7 TE LOGO AND PART NUMBER LOCATED ON ANY FLANGE EDGE

	MOUNTING FEATURE	PACKAGING	PERIPHERAL SEAL	SEE DETAIL	PART NUMBER
	#4-40 THREADED INSERT	STANDARD	NO	A	206151-9
4	ø.150 MOUNTING HOLES	STANDARD	YES	A	206151-8
5 OBSOLETE	ø.150 MOUNTING HOLES	STANDARD	NO	A	~~206151-6~~
5 OBSOLETE	ø.150 MOUNTING HOLES	SMALL PACK	NO	A	~~206151-5~~
	NONE	STANDARD	YES	B	206151-4
	ø.150 MOUNTING HOLES	STANDARD	YES	A	206151-3
	NONE	STANDARD	NO	B	206151-2
	ø.150 MOUNTING HOLES	STANDARD	NO	A	206151-1

THIS DRAWING IS A CONTROLLED DOCUMENT.

DIMENSIONS: INCHES

TOLERANCES UNLESS OTHERWISE SPECIFIED:
0 PLC ± –
1 PLC ± –
2 PLC ± –
3 PLC ± .005
4 PLC ± –
ANGLES ± –

MATERIAL 6

FINISH –

DWN S SCHLEGEL 06DEC2002
CHK A FRANTUM 8/13/83
APVD R STONE 8/13/83

PRODUCT SPEC —

APPLICATION SPEC —

WEIGHT —

CUSTOMER DRAWING

TE Connectivity

NAME RECEPTACLE HOUSING, STANDARD SEX, SHELL SIZE 23, CPC –

SIZE	CAGE CODE	DRAWING NO	RESTRICTED TO
A1	00779	C-206151	—

SCALE 2:1 SHEET 1 OF 1 REV R

4805 (1/15)